Neousys Technology Inc.

PEXI-G360 Suite

User Manual

Revision 1.0

Table of Contents

Table of Contents **2**
Legal Information **3**
Contact Information **4**
Declaration of Conformity **4**
Copyright Notice **5**
Safety Precautions **6**
Battery Warning **6**
Service and Maintenance **7**
ESD Precautions **7**
Restricted Access Location **7**
About This Manual **8**

1 Introduction

1.1 PEXI-G360 Suite Specifications **11**
1.2 Dimension of PEXI-G360 ..... **12**
1.2.1 PEXI Connector PanelView 12
1.2.2 Power Connector Panel View 12
1.3 Wall Mount Dimension **13**
1.4 DIN Rail Dimension **13**

2 System Overview

2.1 Packing List **14**
2.1.1 PEXI-G360 Suite 14
2.1.2 PEXI-G360 14
2.2 Status LED **15**
2.3 PEXI Power Connector **16**
2.3.1 PEXI Connector 17

3 Installation

3.1 Graphics Card Installation **19**
3.2 PEXI Cable Connection/ Installation **26**
3.3 Bracket Installation **29**
3.3.1 Wall Mount Bracket Installation 29
3.3.2 Damping Bracket Installation 30
3.4 Din Rail Installation **31**
3.5 Powering On the System **32**
3.6 Powering Off the System **33**

Legal Information

All Neousys Technology Inc. products shall be subject to the latest Standard Warranty Policy

Neousys Technology Inc. may modify, update or upgrade the software, firmware or any accompanying user documentation without any prior notice. Neousys Technology Inc. will provide access to these new software, firmware or documentation releases from download sections of our website or through our service partners.

Before installing any software, applications or components provided by a third party, customer should ensure that they are compatible and interoperable with Neousys Technology Inc. product by checking in advance with Neousys Technology Inc. Customer is solely responsible for ensuring the compatibility and interoperability of the third party's products. Customer is further solely responsible for ensuring its systems, software, and data are adequately backed up as a precaution against possible failures, alternation, or loss.

For questions in regards to hardware/ software compatibility, customers should contact Neousys Technology Inc. sales representative or technical support.

To the extent permitted by applicable laws, Neousys Technology Inc. shall NOT be responsible for any interoperability or compatibility issues that may arise when (1) products, software, or options not certified and supported; (2) configurations not certified and supported are used; (3) parts intended for one system is installed in another system of different make or model.

Contact Information

For contact information, please visit our official website.

Declaration of Conformity

FCC

This equipment has been tested and found to comply with the limits for a Class A digital device, pursuant to part 15 of the FCC Rules. These limits are designed to provide reasonable protection against harmful interference when the equipment is operated in a commercial environment. This equipment generates, uses, and can radiate radio frequency energy and, if not installed and used in accordance with the instruction manual, may cause harmful interference to radio communications. Operation of this equipment in a residential area is likely to cause harmful interference in which case the user will be required to correct the interference at own expense.

CE

The product(s) described in this manual complies with all applicable European Union (CE) directives if it has a CE marking. For computer systems to remain CE compliant, only CE-compliant parts may be used. Maintaining CE compliance also requires proper cable and cabling techniques.

Copyright Notice

All rights reserved. This publication may not be reproduced, transmitted, transcribed, stored in a retrieval system, or translated into any language or computer language, in any form or by any means, electronic, mechanical, magnetic, optical, chemical, manual or otherwise, without the prior written consent of Neousys Technology, Inc.

Disclaimer

This manual is intended to be used as an informative guide only and is subject to change without prior notice. It does not represent commitment from Neousys Technology Inc. Neousys Technology Inc. shall not be liable for any direct, indirect, special, incidental, or consequential damages arising from the use of the product or documentation, nor for any infringement on third party rights.

Patents and Trademarks

Neousys, the Neousys logo, Expansion Cassette, MezIO® are registered patents and trademarks of Neousys Technology, Inc.

Windows is a registered trademark of Microsoft Corporation.

AMD, Ryzen™ are registered trademarks of Advanced Micro Devices, Inc

All other names, brands, products or services are trademarks or registered trademarks of their respective owners.

Safety Precautions

- Read these instructions carefully before you install, operate, or transport the system.
- Install the system or DIN rail associated with, at a sturdy location
- Install the power socket outlet near the system where it is easily accessible
- Secure each system module(s) using its retaining screws
- Place power cords and other connection cables away from foot traffic. Do not place items over power cords and make sure they do not rest against data cables
- Shutdown, disconnect all cables from the system and ground yourself before touching internal modules
- Ensure that the correct power range is being used before powering the device
- Should a module fail, arrange for a replacement as soon as possible to minimize down-time
- By means of a power cord connected to a socket-outlet with earthing connection
- This product is intended to be supplied by a Listed Power Adapter or DC power source, rated up to 5000m altitude operation. If further assistance is required, please contact Neousys Technology
- If the system is not going to be used for a long time, disconnect it from mains (power socket) to avoid transient over-voltage

Battery Warning

- Batteries are at risk of exploding if incorrectly installed.
- Do not attempt to recharge, force open, or heat the battery.
- Replace the battery only with the same or equivalent type recommended by the manufacturer.



Service and Maintenance

- ONLY qualified personnel should service the system
- Shutdown the system, disconnect the power cord and all other connections before servicing the system
- When replacing/ installing additional components (expansion card, memory module, etc.), insert them as gently as possible while assuring proper connector engagement

ESD Precautions

- Handle add-on module, motherboard by their retention screws or the module's frame/ heat sink. Avoid touching the PCB circuit board or add-on module connector pins
- Use a grounded wrist strap and an anti-static work pad to discharge static electricity when installing or maintaining the system
- Avoid dust, debris, carpets, plastic, vinyl and styrofoam in your work area.
- Do not remove any module or component from its anti-static bag before installation

Restricted Access Location

The controller is intended for installation only in certain environments where both of the following conditions apply:

- Access can only be gained by QUALIFIED SERVICE PERSONNEL who have been instructed on the reasons for restrictions applied to the location and any precautions that shall be taken
- Access is through the use of a TOOL, lock and key, or other means of security, and is controlled by the authority responsible for the location

About This Manual

This manual introduces Neousys PEXI-G360 Suite and demonstrates the installation procedures for a graphics card into the enclosure.

Revision History

Version	Date	Description
1.0	Nov. 2026	Initial release

1 Introduction

The PEXI-G360 Suite is a rugged, plug-and-play, 360W eGPU retrofit kit designed for effortless AI performance upgrades. It includes everything you need for a seamless integration: a rugged external GPU cassette (PEXI-G360), a PCIe-to-PEXI adapter (PCIe-SAS441), and a 60cm PEXI cable. It targets two primary applications: adding AI capabilities to existing algorithm-based vision computers, and space-constrained outdoor in-vehicle or AMR applications requiring a discrete system architecture.



PEXI is a Neousys proprietary protocol designed for external high-speed I/O devices, featuring several purposely engineered details for deployment. First, it incorporates fine-tuned onboard redrivers to guarantee signal integrity up to PCIe Gen4 x4 over a 60cm PEXI cable. Secondly, unlike some eGPUs that require an additional power button, PEXI integrates a remote power management sideband, ensuring the PEXI-G360 shares the identical power state as the host computer (e.g., standby or runtime). Finally, we designed specialized PEXI connector covers to enhance shock and vibration resistance and prevent unexpected cable disconnection.

The PEXI-G360 is engineered for challenging environmental conditions. It features an industrial-grade power design to support up to 360W GPU cards, such as the RTX Pro 5000, Pro 6000 MAX-Q, or similar high-power models. The PEXI-G360 also comes with a GPU retention bracket for select models and an optional damping bracket to ensure compliance with MIL-STD-810H standards. Furthermore, its rugged thermal design supports a -25°C to 60°C wide operating temperature range, while the 9V to 32V wide-range DC input makes it ideal for in-vehicle and on-robot deployments. Alternatively, for machine vision applications combining rule-based and AI-aided inspection, the PEXI-G360 Suite serves as a flexible option that helps customers standardize on a single computer model, adding the PEXI-G360 only for production lines requiring additional AI performance. It also offers a DIN-rail mounting option for easy cabinet installation.

The PEXI-G360 Suite embodies a bold new concept: treating AI acceleration as a flexible, modular option rather than a fixed attribute of the host computer. By combining 360W GPU support, PCIe Gen4 x4 bandwidth, wide operating temperature support, and robust shock and

vibration resistance, it upgrades existing industrial computers into high-performance physical AI computers.

.

1.1 PEXI-G360 Suite Specifications

I/O Interface	
External PCIe Connector	1x PCIe Gen4x4 via PCIe-SAS441 or PEXI interface
Power Supply	
DC input	1x 4-pin pluggable terminal block for 9V to 32V DC input*
Mechanical	
Dimensions	76mm (W) x 385mm (D) x 170mm (H)
Weight	2.0 kg
Mounting	Damping/ wall-mount bracket(optional) or DIN-rail mount (optional)
Environmental	
Operating Temperature	-25°C to 60°C
Storage Temperature	-40°C to 85°C
Humidity	10% to 90%, non-condensing
Vibration	MIL-STD-810H, Method 514.8, Category 4
Shock	MIL-STD-810H, Method 516.8, Procedure I
EMC	CE/ FCC Class A, according to EN 55032 & EN 55035

** The maximum current of each pin is 40A.*

1.2 Dimension of PEXI-G360

1.2.1 PEXI Connector PanelView

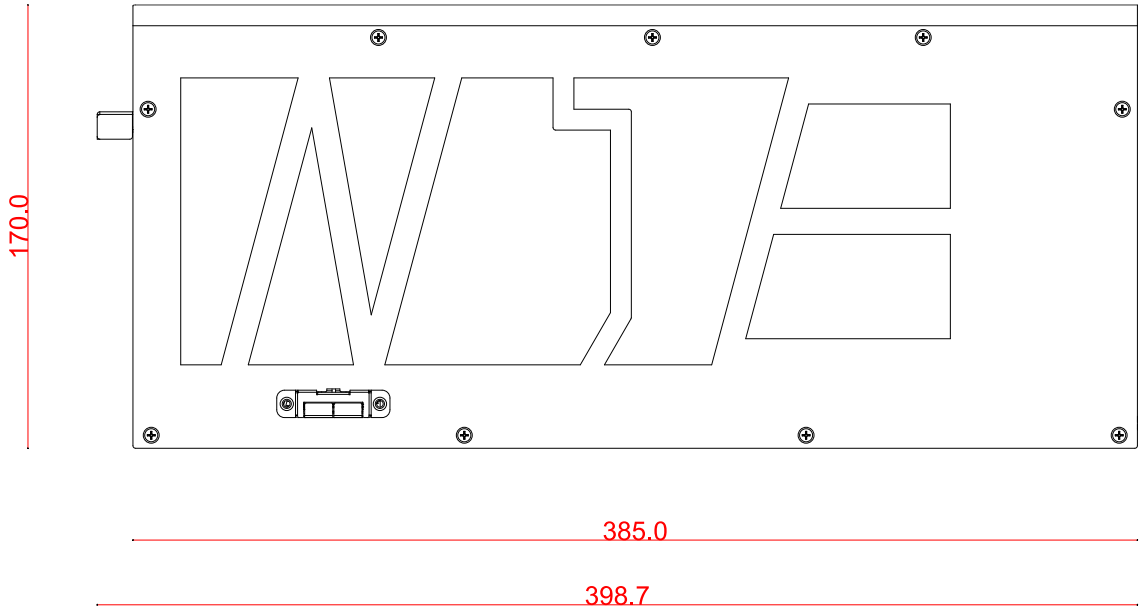

1.2.2 Power Connector Panel View

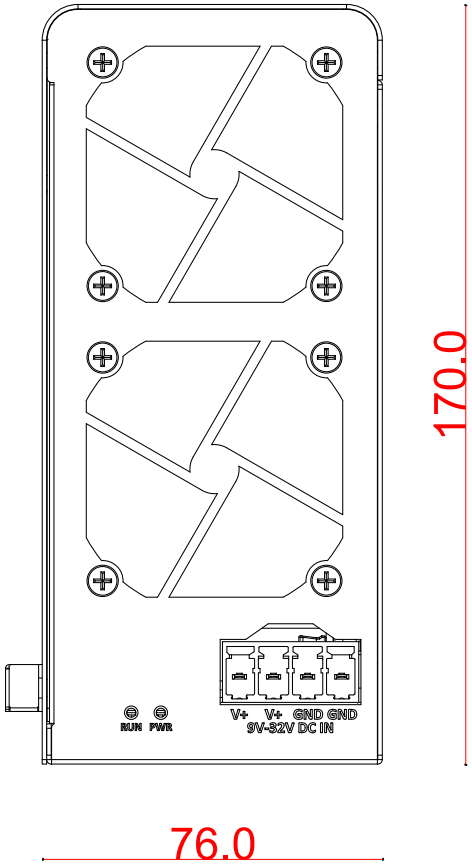

1.3 Wall Mount Dimension

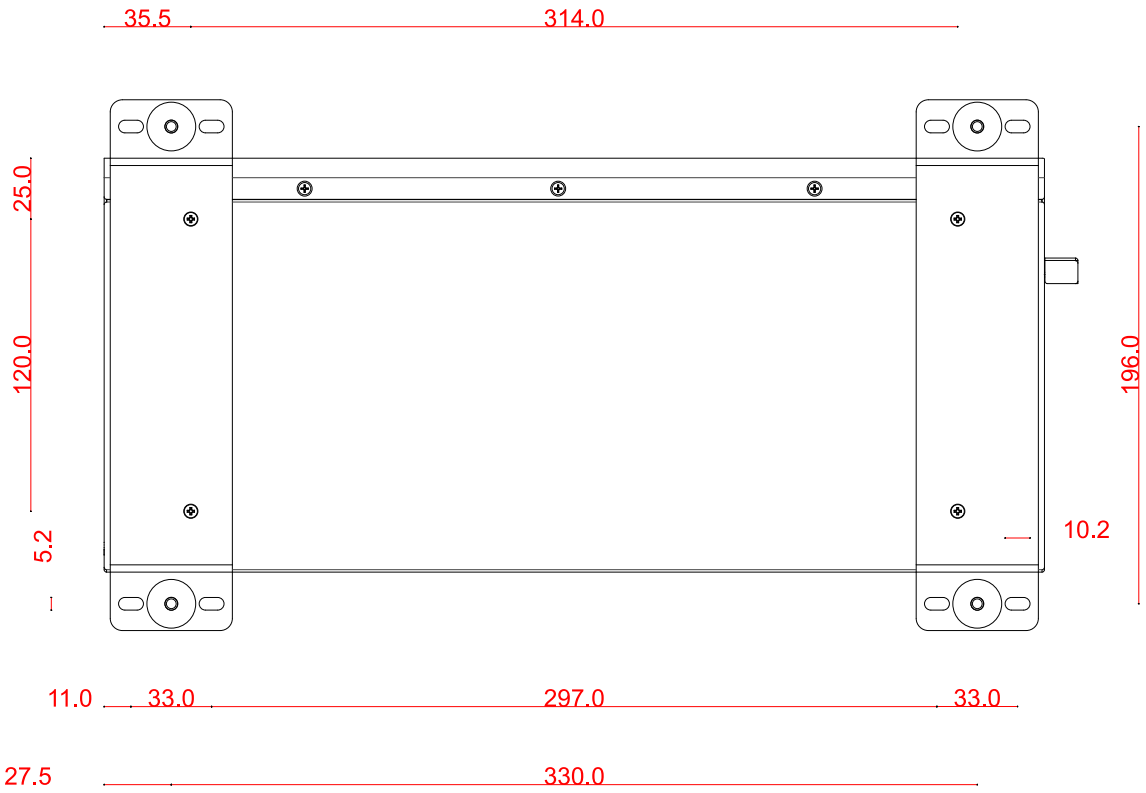

1.4 DIN Rail Dimension

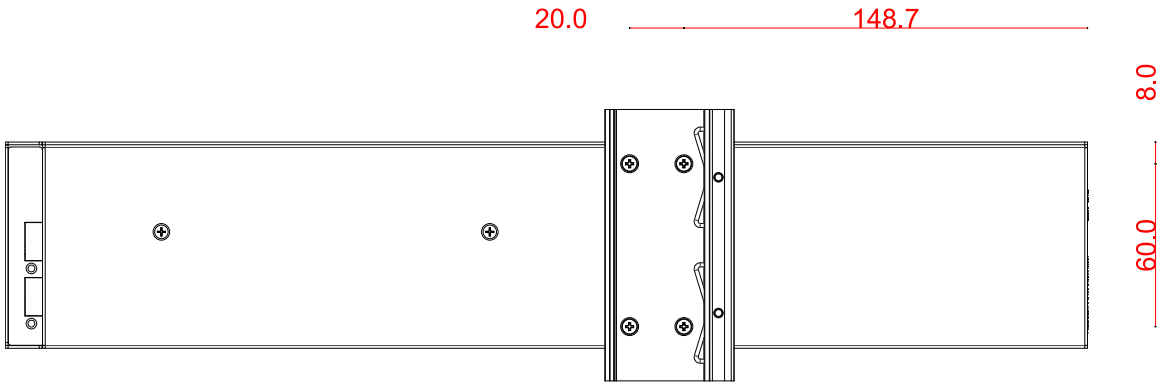

2 System Overview

Upon receiving and unpacking your system, please check immediately if the package contains all the items listed in the following table. If any item(s) are missing or damaged, please contact your local dealer or Neousys Technology.

2.1 Packing List

2.1.1 PEXI-G360 Suite

Item	Description	Qty
1	PEXI-G360 & PCIe-SAS441	1
2	Accessory box, which contains	
	● PEXI Plug to PEXI Plug 60cm	1
	● TB plug w/Lever 4-Pole 7.62mm ST	1
	● ATX3.0 12VHPWR to 12VHPWR(12+4P) 35cm	1
	● PEXI-G360 GPU Bracket	1
	● PEXI-G360 Cable Cover	1
	● Nuvo-2000+ Rubber Foot	4
	● PCBA PCIe-SAS441	1
	● PCIe-SAS441 PEXI Cover	1
	● 185mm Cable Tie	3
	● Screw pack	1

2.1.2 PEXI-G360

Item	Description	Qty
1	PEXI-G360	1
2	Accessory box, which contains	
	● PEXI Plug to PEXI Plug 60cm	1
	● TB plug w/Lever 4-Pole 7.62mm ST	1
	● ATX3.0 12VHPWR to 12VHPWR(12+4P) 35cm	1
	● PEXI-G360 GPU Bracket	1
	● PEXI-G360 Cable Cover	1
	● Nuvo-2000+ Rubber Foot	4
	● 185mm Cable Tie	3
	● Screw pack	1

2.2 Status LED

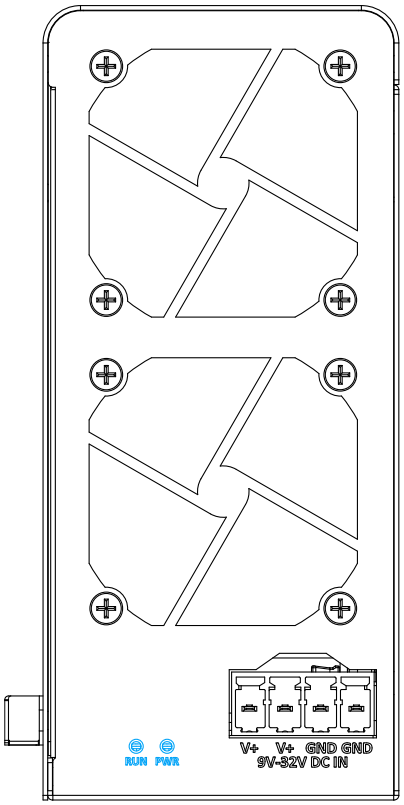

LED	Color	Description
Run	White	Lit when PEXI-G360 is connected to a host system that is powered on.
	Off	When PEXI-G360 is not connected to a host system or the host system is not powered on.
PWR	White	Lit when PEXI-G360's power cable is connected, and supplied with power.
	Off	When PEXI-G360 is not supplied with power.

2.3 PEXI Power Connector

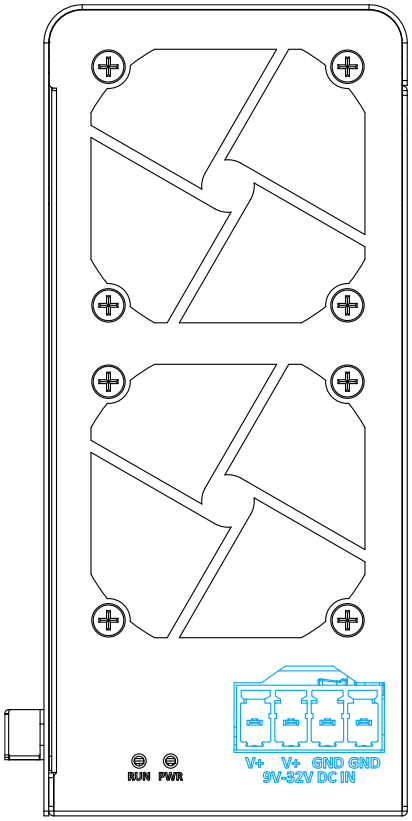

The 4-pin terminal block connector provides a secure and reliable DC power interface, featuring dual V+ and GND terminals for improved current handling and power distribution. Supporting a wide 9–32V DC input range, it accommodates various industrial power sources while providing flexibility for different system configurations. The robust terminal block design ensures stable connections in demanding industrial environments, making it well suited for embedded computers, automation systems, vehicles, and other applications requiring reliable DC power input.

2.3.1 PEXI Connector

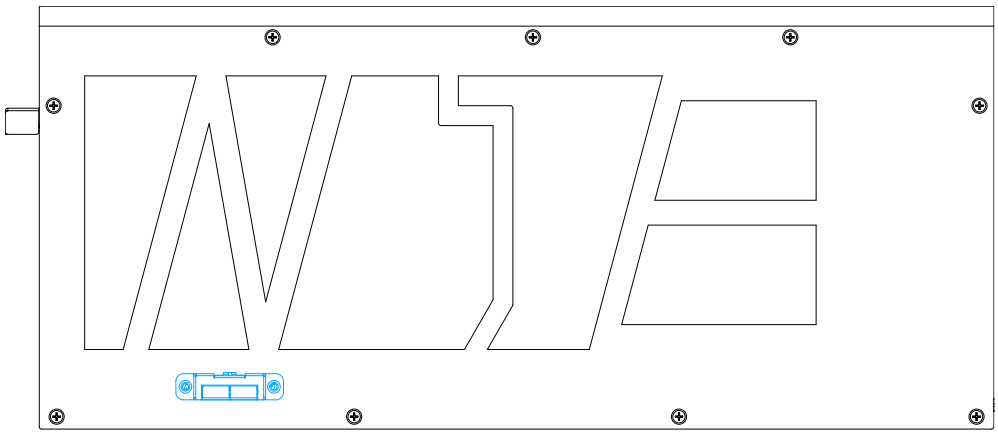

PEXI Proprietary Interface and Power Management

PEXI is a proprietary high-speed I/O interface developed by Neousys, incorporating purpose-designed features to ensure reliable operation in demanding deployment environments. Unlike other external GPU (eGPU) solutions that require a separate power button, PEXI integrates a remote power management sideband that synchronizes the PEXI-G360's power state with that of the host computer, including standby and runtime states.

Cable Installation and Connector Cover

For reliable operation, follow the recommended cable installation guidelines to ensure a secure connection. A connector cover is included in the accessory kit and should be securely fastened after cable installation to help prevent cable disconnection and maintain a stable connection during operation.

3 Installation

Before disassembling the system enclosure, please make sure you have done the following:

- It is recommended that only qualified service personnel should install and service this product to avoid injury or damage to the system.
- Please observe all ESD procedures at all times to avoid damaging the equipment.
- Before disassembling your system, please make sure you have the module/ component you wish to install at hand and have all the necessary tools.
- Before disassembling your system, please make sure the system has powered off, all cables and antenna (power, video, data, etc.) are disconnected.
- Place the system on a flat and sturdy surface (remove from mounts or out of server cabinets) before proceeding with the installation/ replacement procedure.

3.1 Graphics Card Installation

To install a graphics card into PEXI-G360, please refer to the following procedures:

1. With the ventilation opening facing upwards, remove the **screws** indicated.

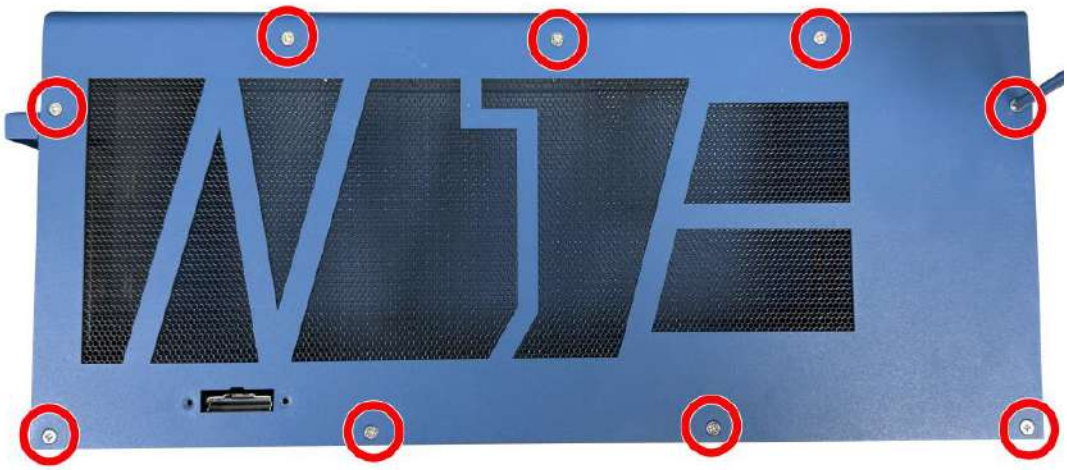

2. With the ventilation opening facing downwards, remove the **screws** indicated.



3. Gently separate the cover from the enclosure.

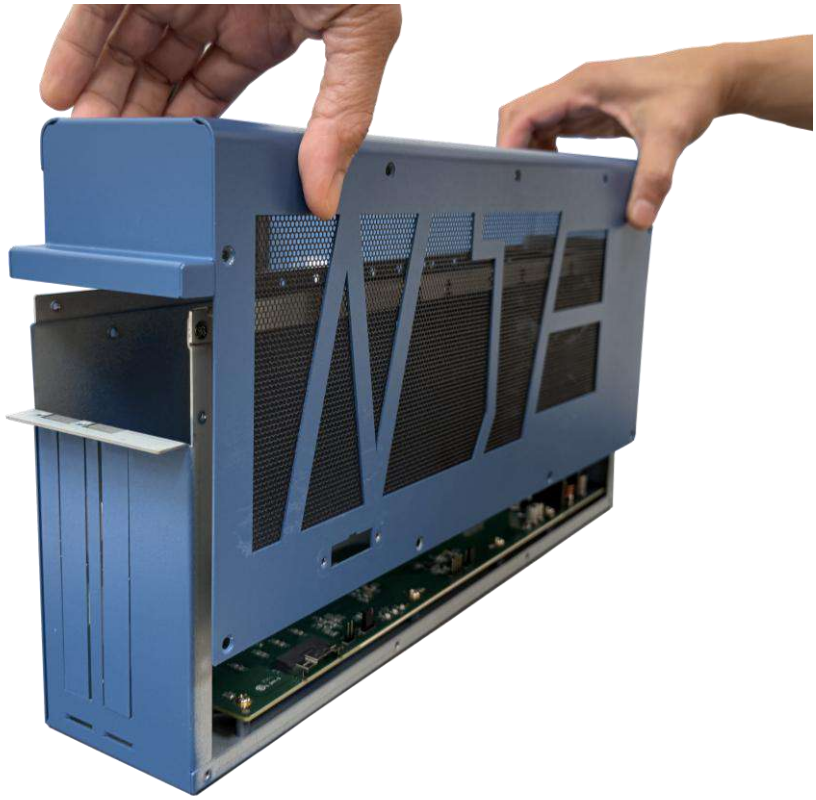

4. Remove the panel puch-out covers.

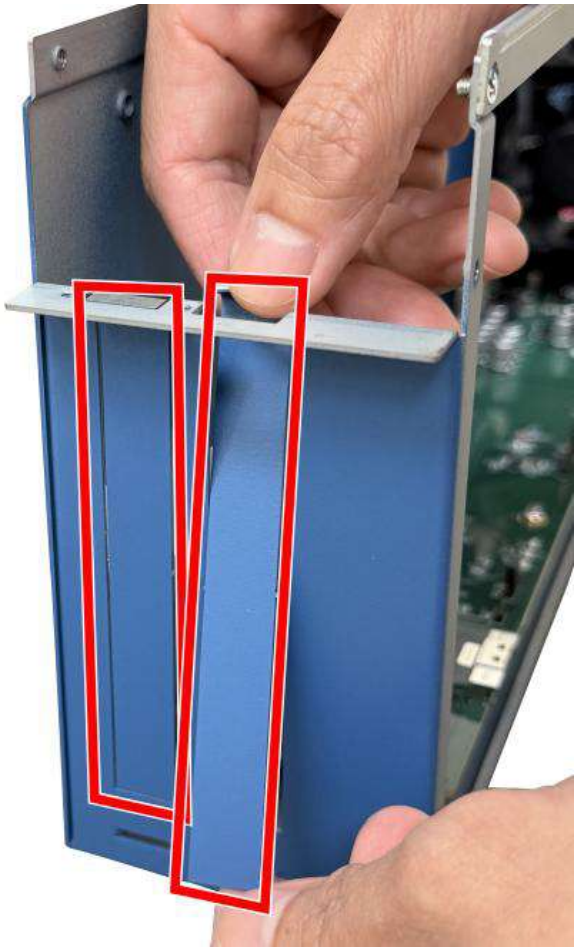

5. Remove the protection film on the PCB's power connector.

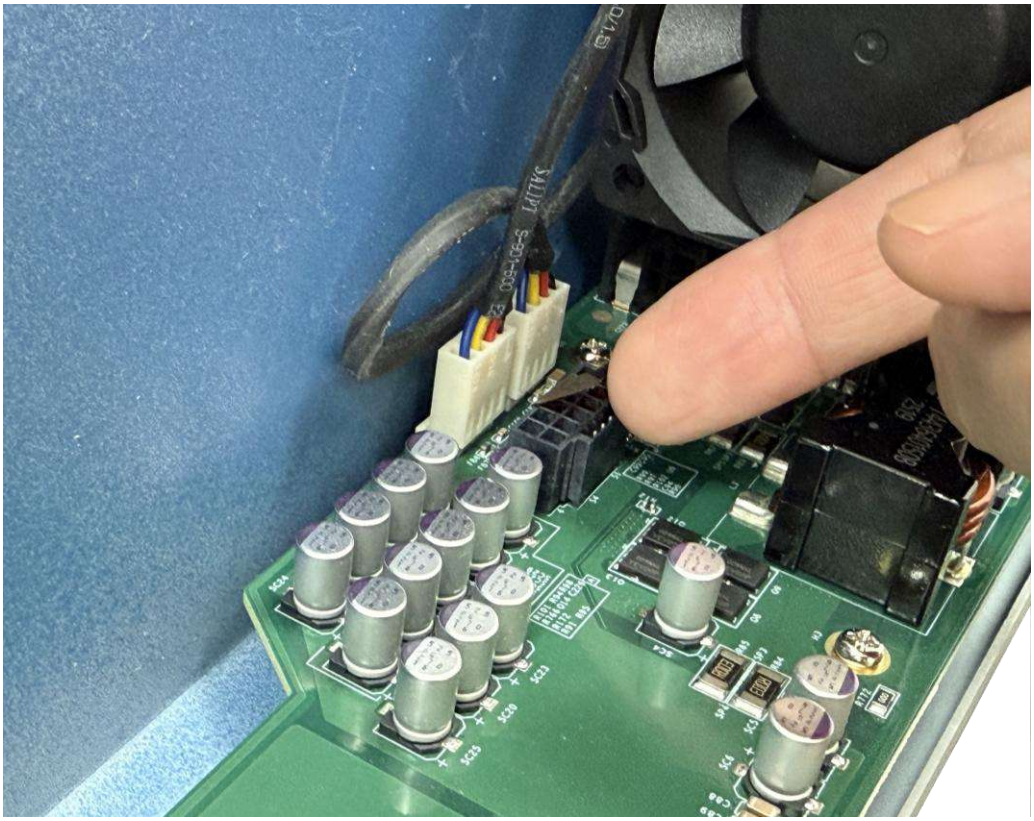

6. Connect the power cable to the PCB's power connector.

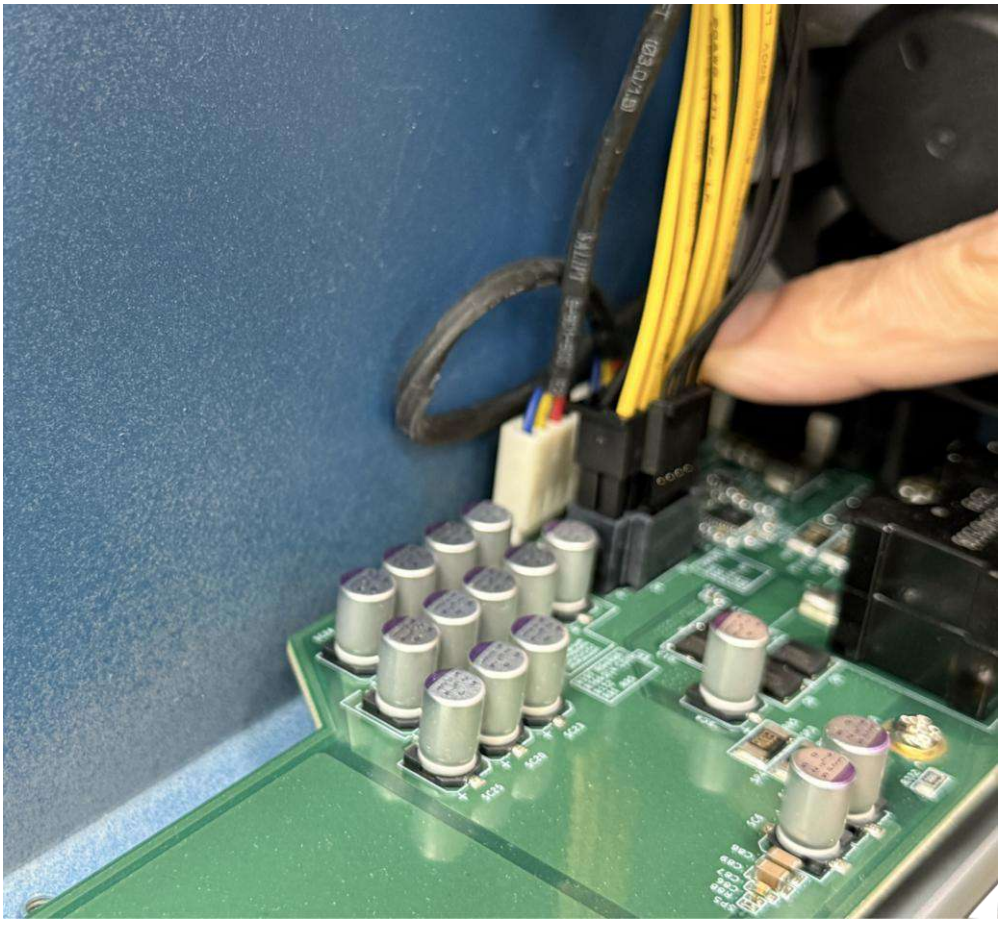

7. Take the bracket out of the accessory box, and secure it to the graphics card.

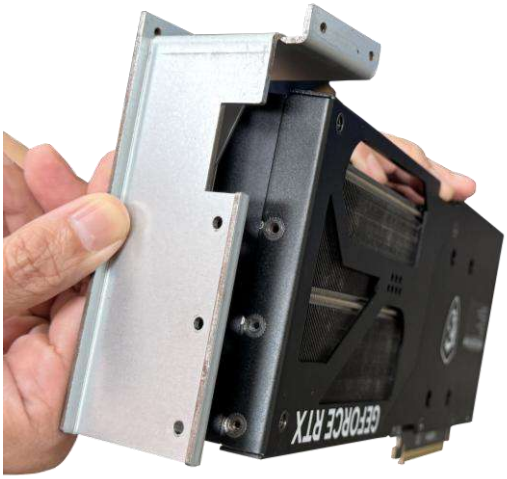

Attach bracket by matching the screw-hol



Secure the bracket with screws

8. Lower the graphics card into the enclosure, and insert the goldfingers into the PCIe slot.

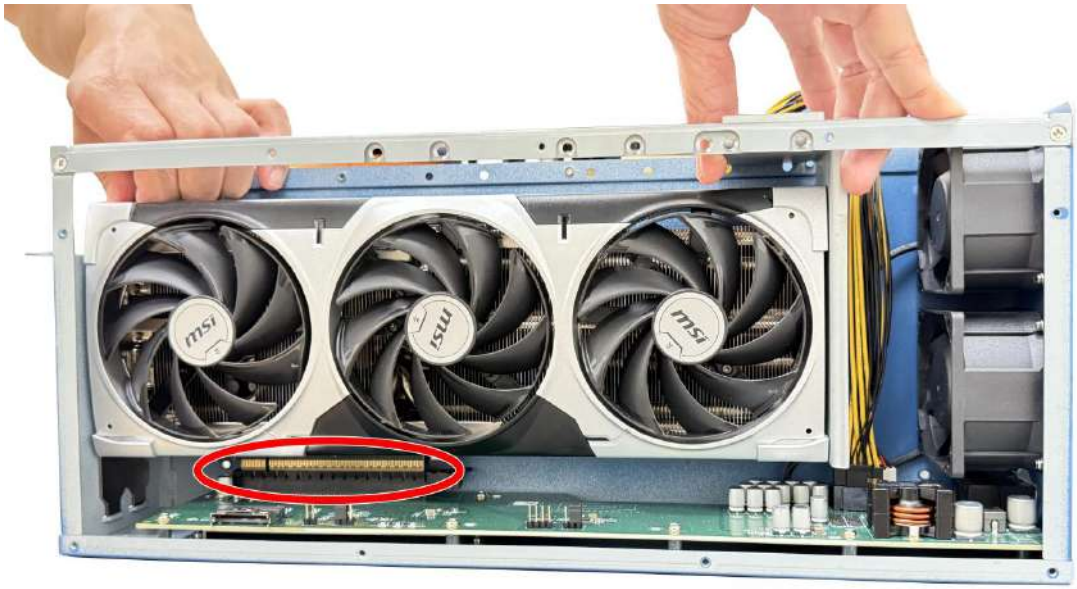

9. Secure the graphics card inside the enclosure by securing the IO panel and the bracket.

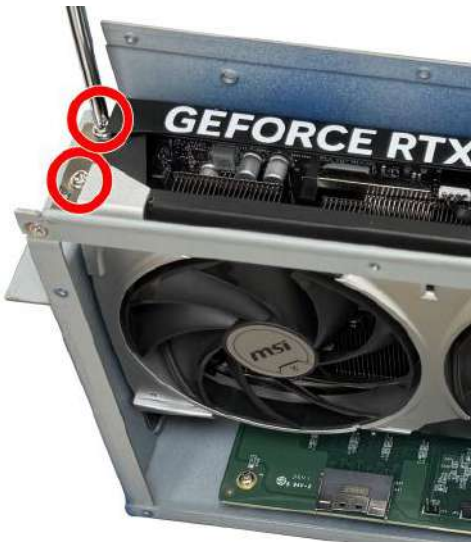

IO panel screws

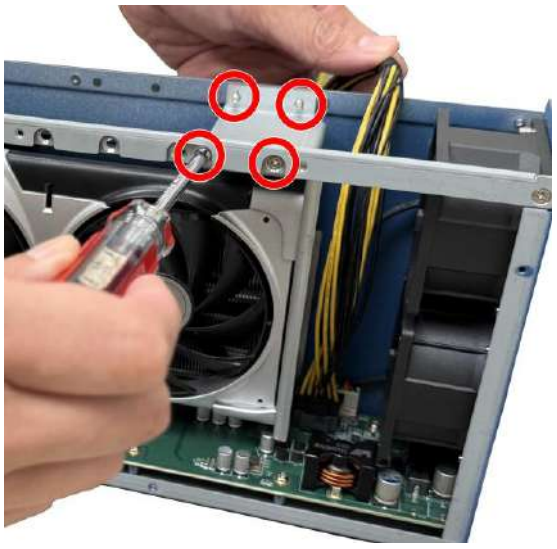

Bracket/ enclosure screws

10. Once the graphics card has been secured, connect the power cable onto the graphics card.

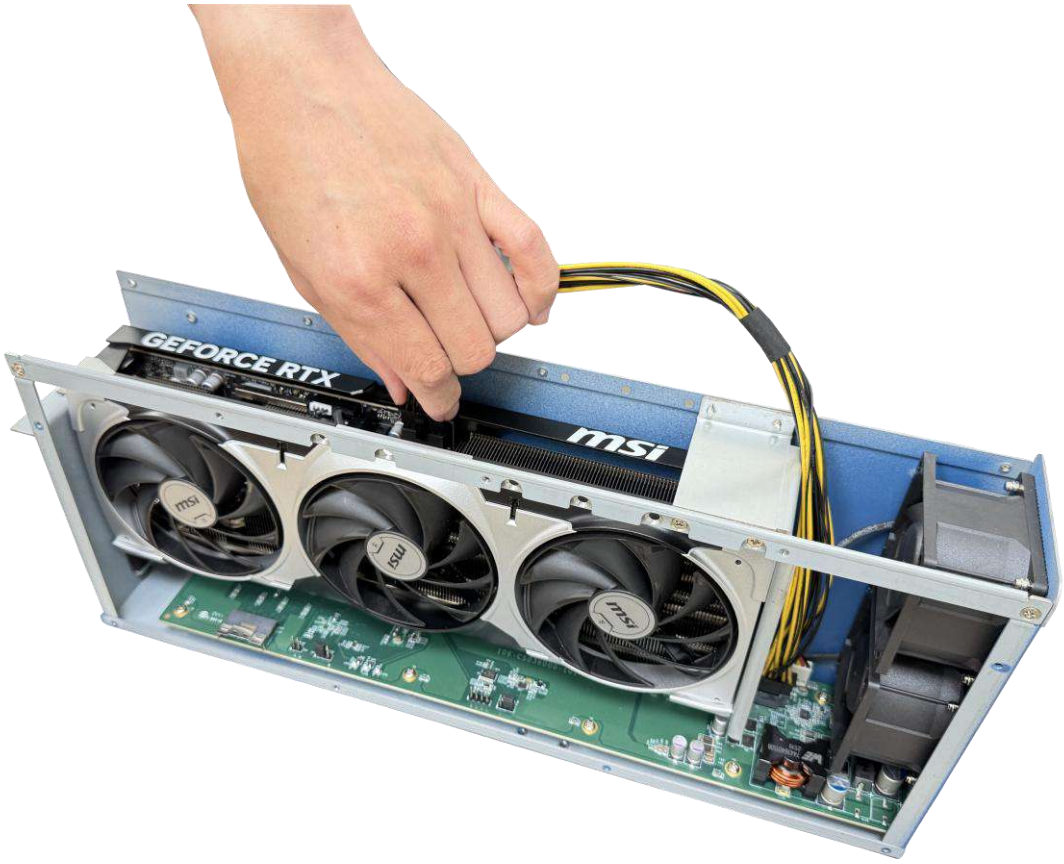

11. Make sure the power cable is positioned away from the internal enclosure fans by securing it with the provided zip tie.



Position cable away from fan



Secure with a zip tie

12. Remove the excess zip tie.

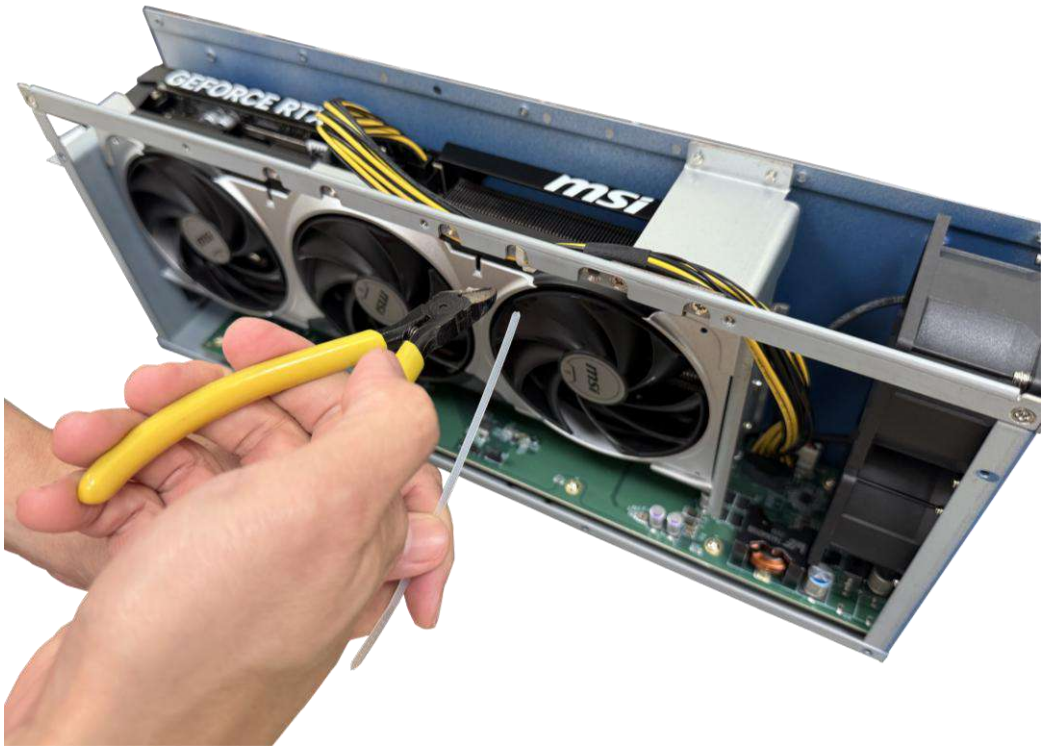

13. Place the cover back onto the enclosure.

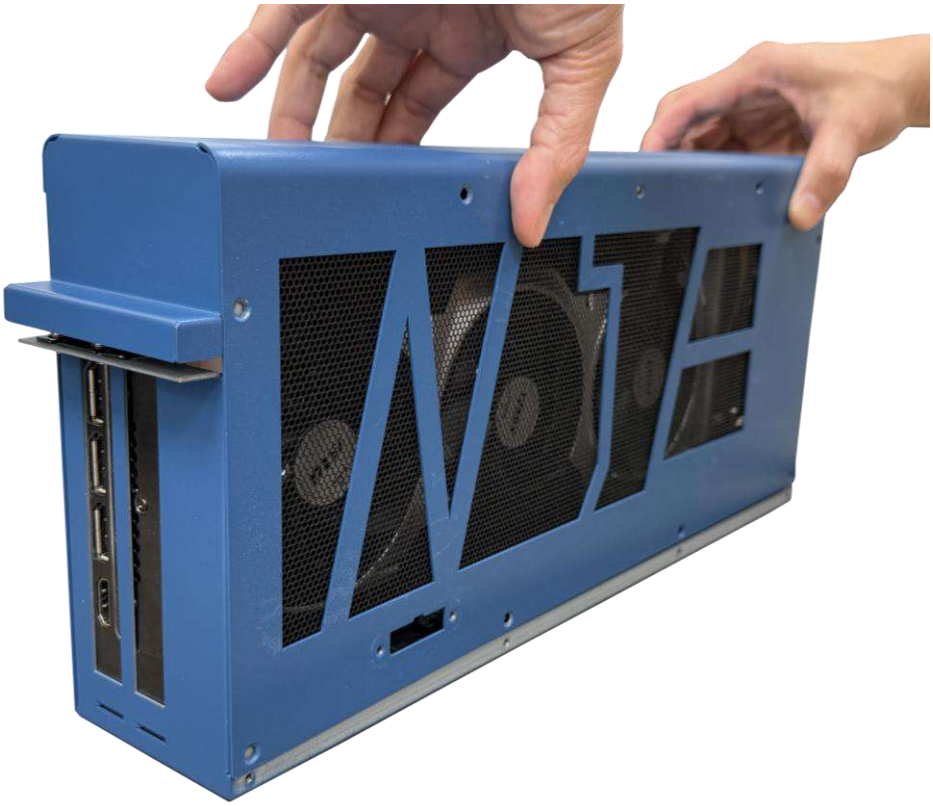

14. Secure the screws on the ventilation panel.

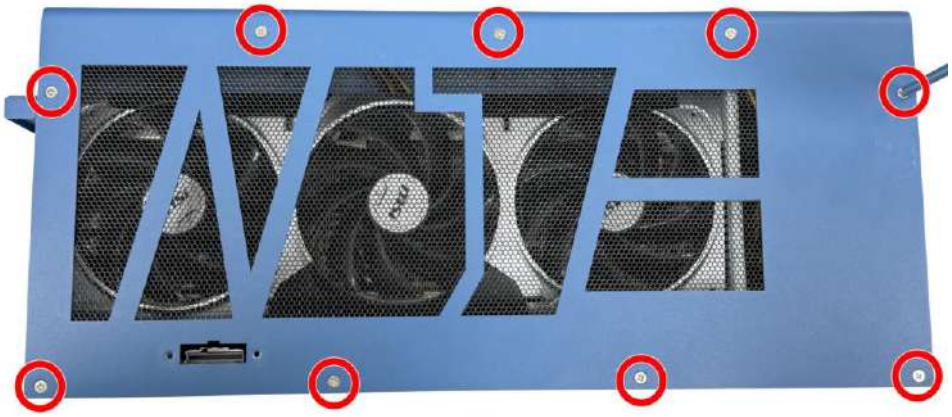

15. Secure the screws on the panel, on the other side to complete the graphics card installation.



3.2 PEXI Cable Connection/ Installation

To install the PEXI cable, please refer to the following procedure:

1. Insert the PEXI cable into the connector on the ventilation panel.

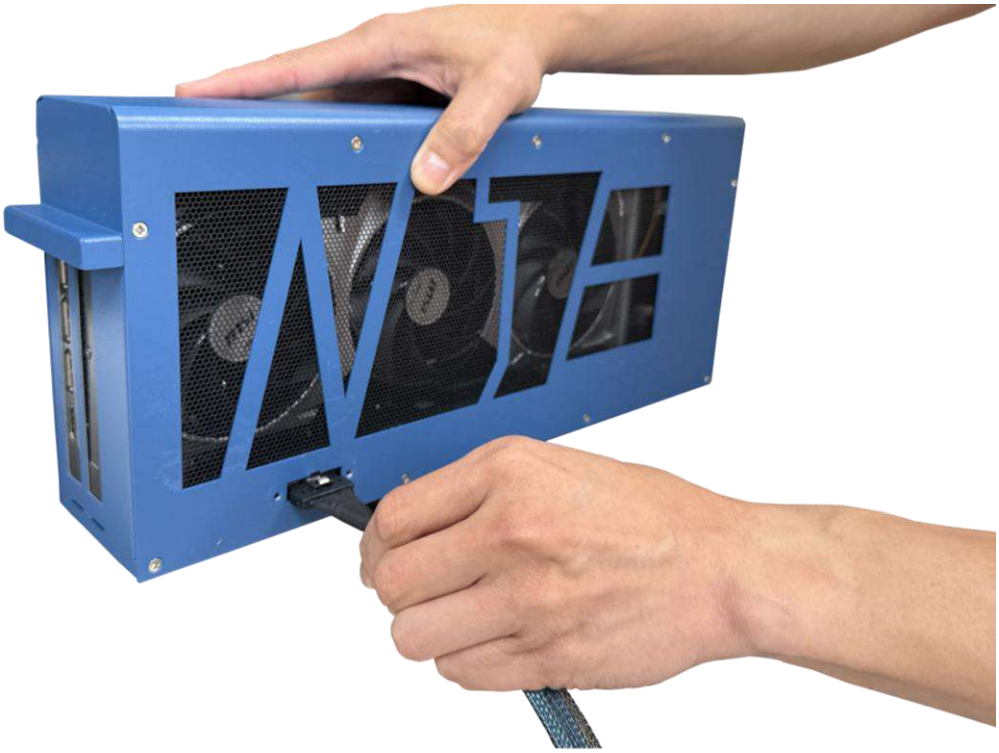

NOTE

You should hear a "Click" sound when the cable is properly inserted. Please give it a gentle tug to make sure it is properly inserted.

2. Place the PEXI connector cover/ holder over the connector opening.

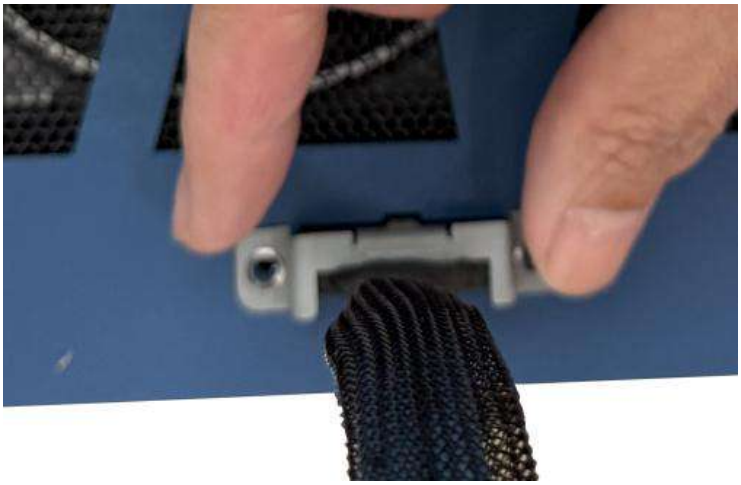

3. Secure the connector cover/ holder with the screws indicated.



4. If you purchased the PEXI-G360 Suite, please make sure the PCIe-SAS441 interface expansion card has been installed into the host system and is properly secured (For demonstration purposes, the PCIe-SAS441 card shown here is not installed). Insert the PEXI cable.

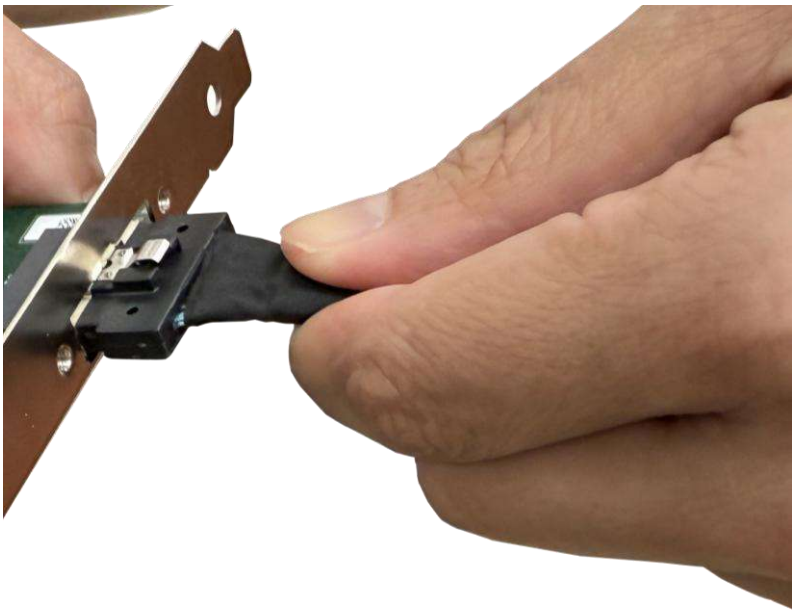

5. Place the PEXI cover/ holder over the connector opening.



NOTE

You should hear a "Click" sound when the cable is properly inserted. Please give it a gentle tug to make sure it is properly inserted.

6. Secure the connector cover/ holder with the screws indicated to complete the PEXI cable connection/ installation.

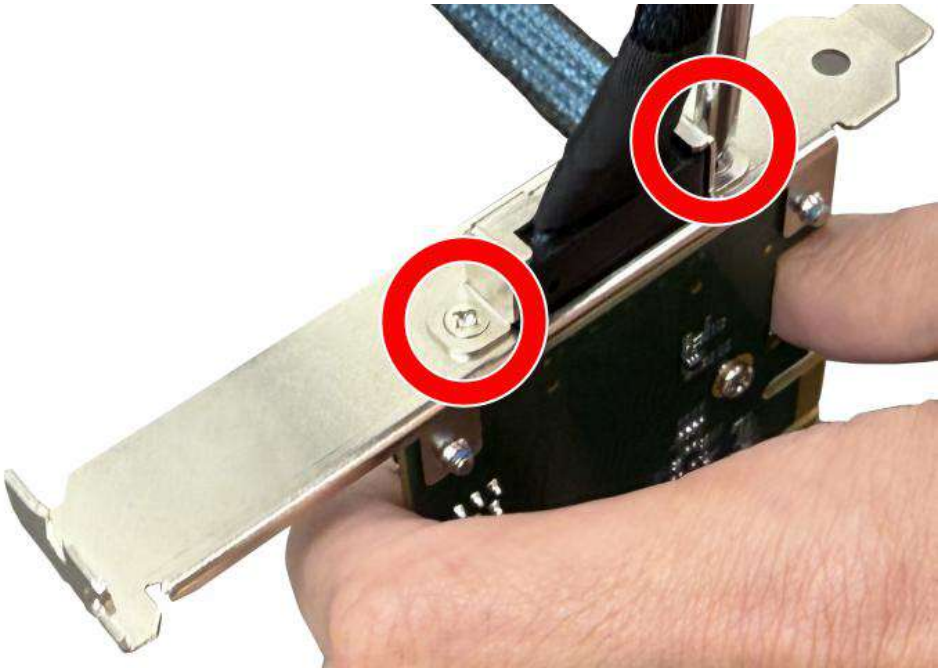

3.3 Bracket Installation

The bracket supports flexible installation, allowing the system to be securely wall-mounted or used as a damping bracket to help absorb vibrations and reduce mechanical stress during operation.

3.3.1 Wall Mount Bracket Installation

To install the bracket for wall mounting the system, please refer to the following instructions.

1. Take out the two **brackets** from the accessory box, and secure them onto the enclosure with four **M4 screws**. Place the system on a flat surface, secure with using **M4 screws**.

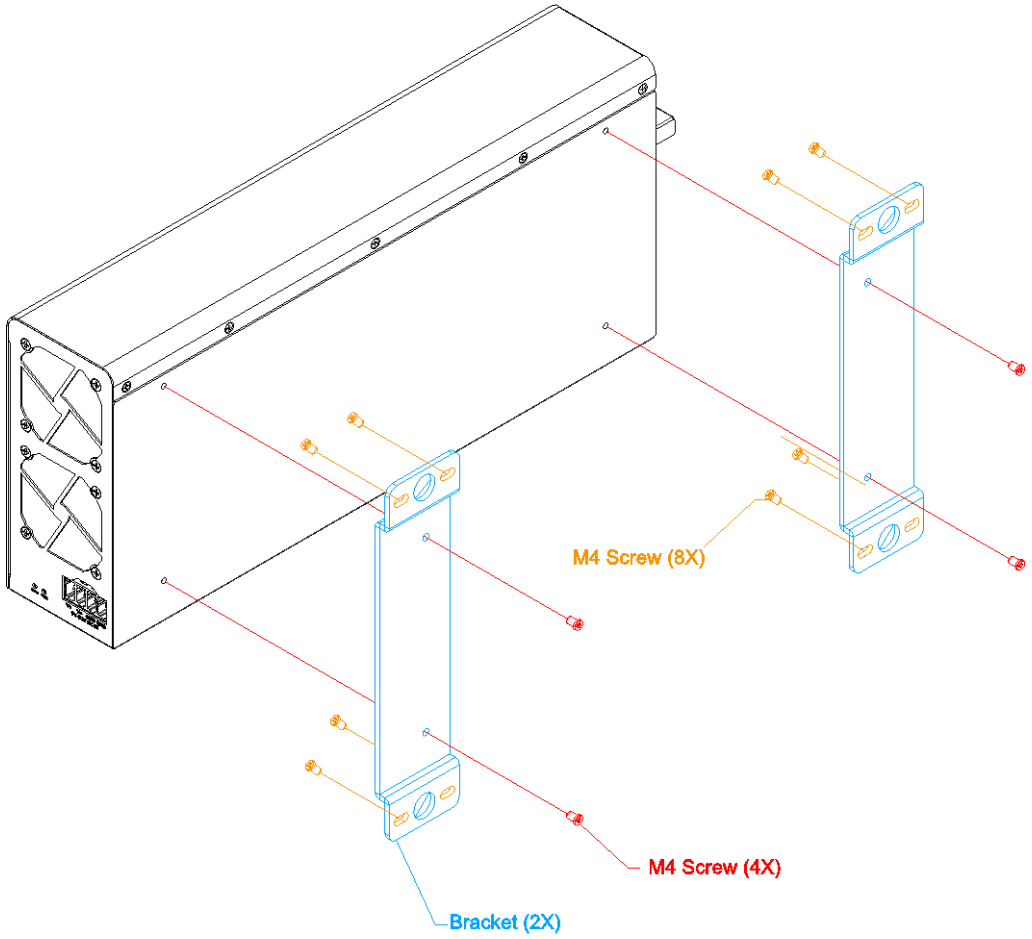

3.3.2 Damping Bracket Installation

To install the bracket for damping applications, please refer to the following instructions.

1. Take out the two **brackets** from the accessory box, and secure them onto the enclosure with four **M4 screws**. Place the system on a flat surface, insert one screw into each of the four **sleeves** assembled with the four **anti-vibration grommets** to secure onto the flat surface.

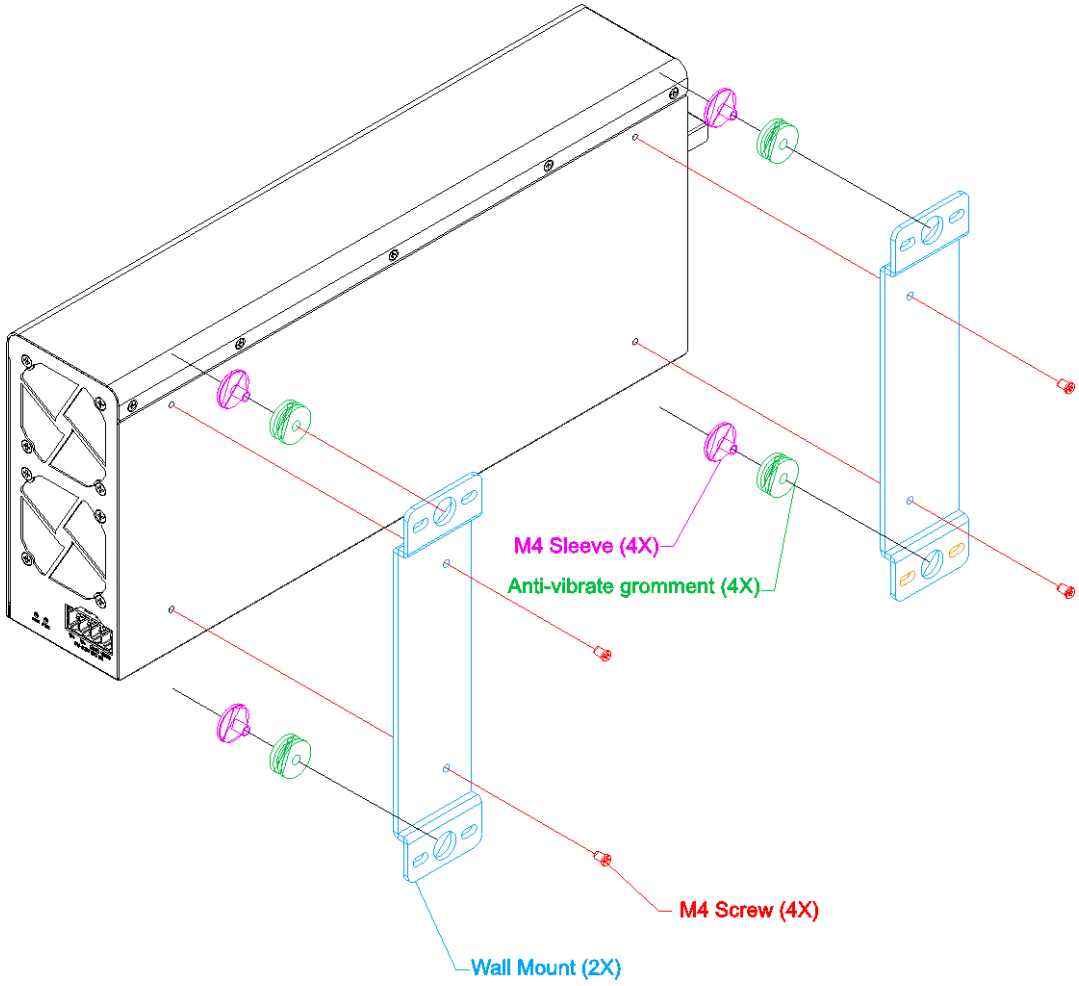

3.4 Din Rail Installation

The DIN rail is easy to install and it is a convenient way to position the system. The DIN rail has been proven to be most beneficial in the industrial environment where space is limited. The mount plate comes with four M4 screws. Please refer to the illustrations below to install the DIN clip/ rail.

To install, secure the **DIN rail clip** onto the rear of the system enclosure using the **M4 screws** provided.

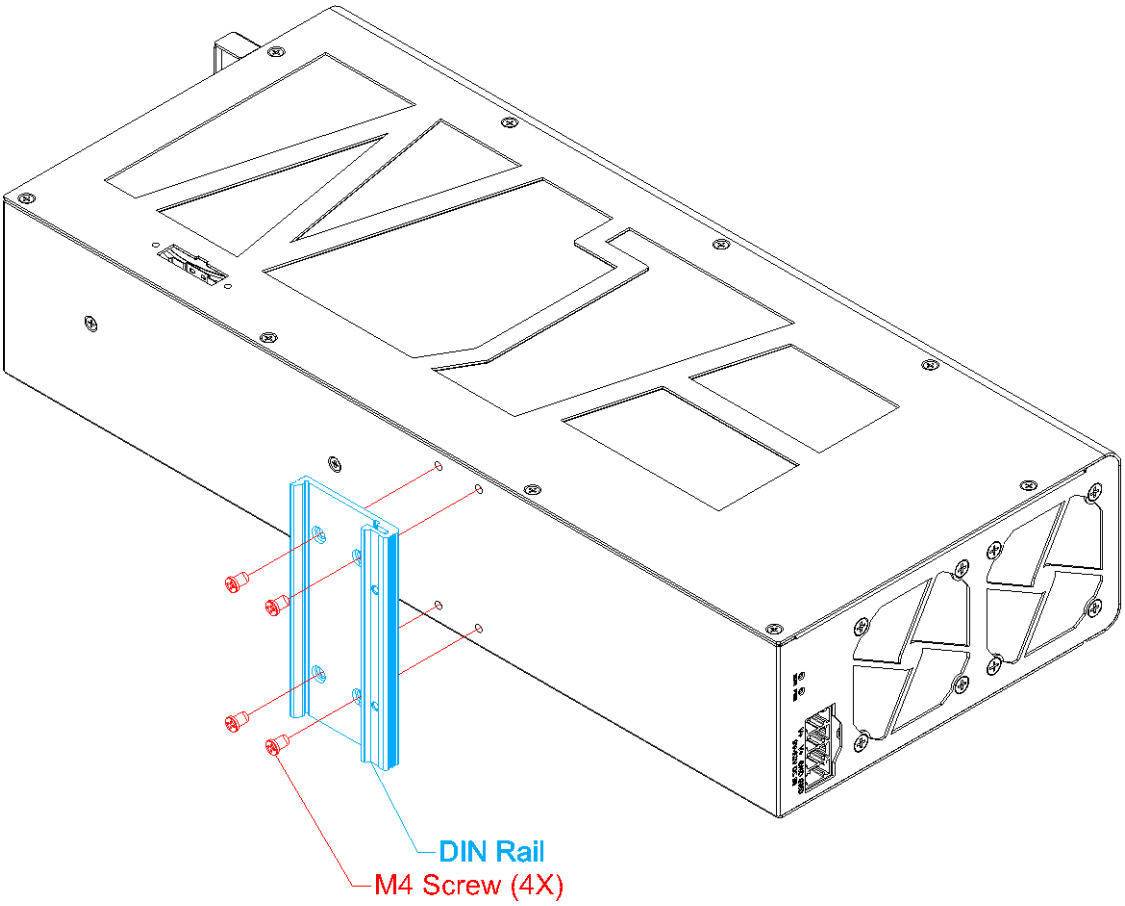

3.5 Powering On the System

To power on the system, please follow the sequence of steps below to ensure proper hardware detection and initialization.

1. Make sure the graphics card has been installed into PEXI-G360. For installation procedures, please refer to this link.

2. Please make sure the optional PCIe-SAS441 card has been installed into the host system. Please refer to your host system's installation instructions.

3. Connect the PEXI cable between PEXI-G360 and the PEXI connector on the host computer. For connection instructions, please refer to this link.

4. Connect the 4-pin terminal block to PEXI-G360, and connect the power adapter to the power plug. At this point, the "PWR" LED should light up, indicating power deliver to the enclosure.

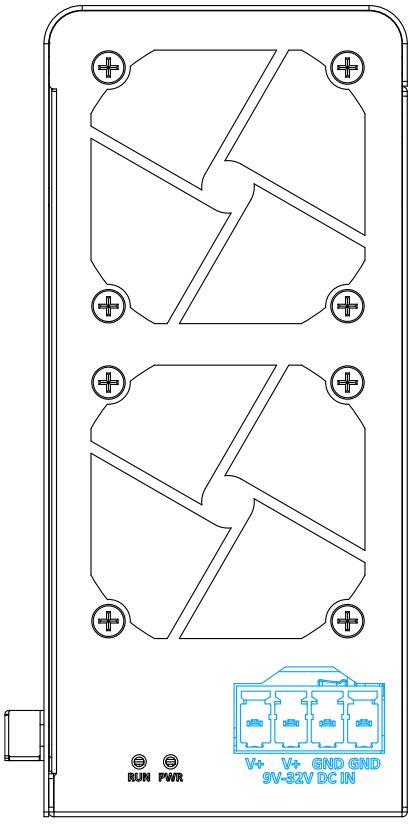

5. Power on the host computer. At this point, the "RUN" LED should light up, indicating successful hardware detection and initialization of PEXI-G360 and the host computer.

3.6 Powering Off the System

To power off the system, please follow the sequence of steps below to ensure proper hardware shutdown.

1. Shutdown the host computer first. At this point, the “RUN” LED should turn off.
2. Unplug the 4-pin terminal block from PEXI-G360, or unplug its power adapter from the power plug. At this point, the “PWR” LED should turn off.