ECN-360A-D2550

Fanless Embedded System with Intel® Solution

Features

- **On-board CPU**
  - » ECN-360A-D2550: Intel® Atom™ D2550 dual-core 1.86 GHz
- **Rich video output solution**
  - » ECN-360A-D2550: 2 x VGA
- **Ruggedized embedded computer**
  - » Supports -10°C~60°C (w/ SSD, air flow)

Specifications

Model Name		ECN-360A-D2550
Chassis	Color	Black
	Dimensions (WxDxH) (mm)	255 x 130 x 63
	System Fan	Fanless
	Chassis Construction	SECC
Motherboard	Motherboard Model	NANO-CV-D25502
	SBC Size (mm)	EPIC, 165 x 115
	CPU	Intel® Atom™ dual-core D2550 1.86GHz
	Chipset	Intel® NM10
	System Memory	1 x 204-pin DDR3 SDRAM SO-DIMM (system max: 4 GB) Pre-installed 2 GB DDR3 memory
Storage	Hard Drive	1 x 2.5" SATA HDD bay
I/O Interfaces	USB 3.0	0
	USB 2.0	6
	Ethernet	2 x Realtek RTL8111E with ASF 2.0 support
	COM Port	3 x RS-232 1 x RS-422/485
	Digital I/O	N/A
	Display	2 x VGA
	Resolution	VGA: Up to 1920 x 1200@60Hz
	Audio	1 x Line-out
	Wireless	1 x 802.11b/g/n (optional)
Expansions	PCIe Mini	1 x Full-size (supports mSATA) 1 x Half-size
Power	Power Input	9 V~36 V DC Power 1: DC jack Power 2: Terminal block
	Power Consumption	12V@1.59A (Intel® dual-core D2550 CPU with 4 GB 1333 MHz DDR3 memory)
Reliability	Mounting	Wall mount, VESA 100
	Operating Temperature	-10°C~60°C with air flow (SSD), 5% ~ 95%, non-condensing
	Operating Shock	Half-sine wave shock 3G, 11ms, 3 shocks per axis
	Operating Vibration	MIL-STD-810F 514.5C-2 (SSD)
	Weight (Net/Gross)	2.2 kg/3 kg

Friendly to Use

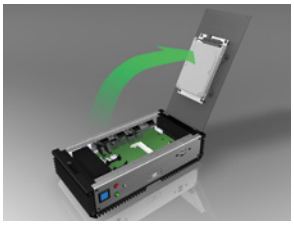

PCIe Mini Expansion

Easy for installation

- Hinge design for rear cover
- Easy assembly of storage/memory/PCIe Mini card

Wide range of DC power input

- ECN-360A-D2550: 9 V~28 V DC

Fully Integrated I/O

Front view

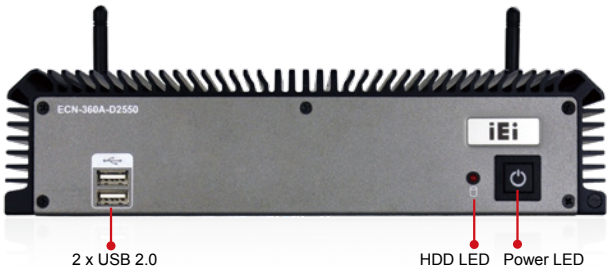

Rear view

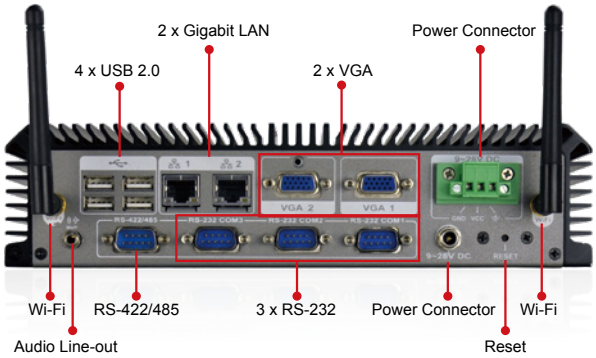

Dimensions *(Unit: mm)*

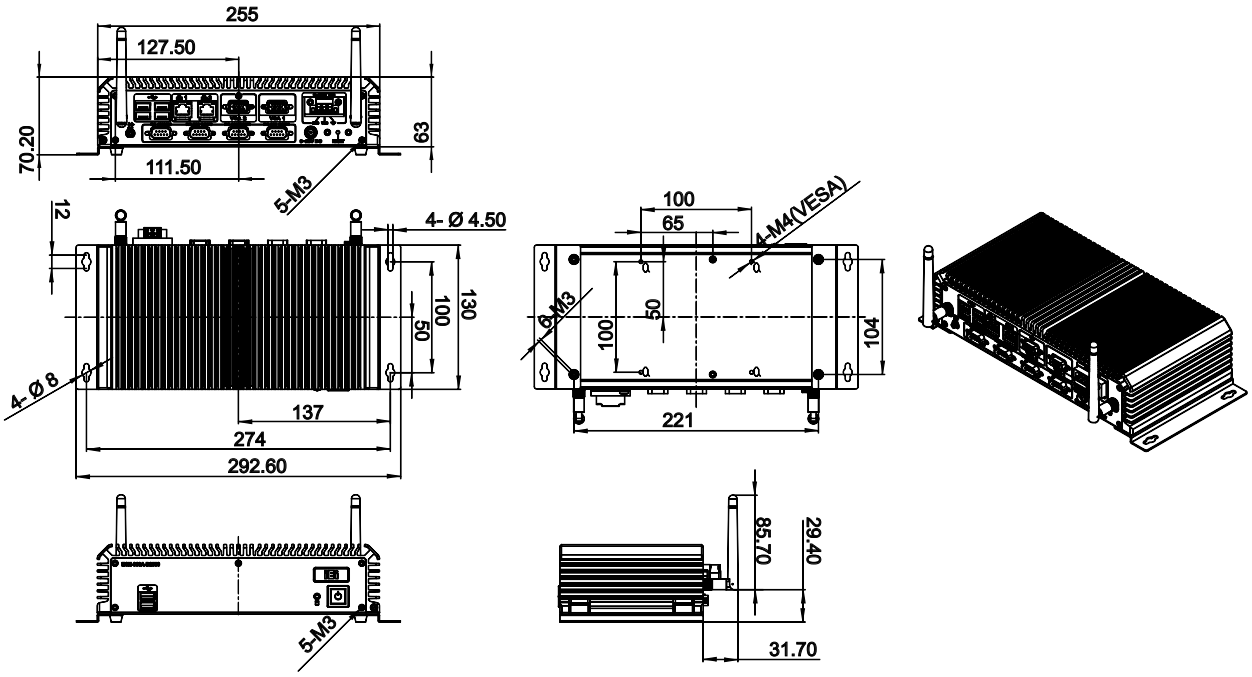

Ordering Information

Part No.	Description
ECN-360A-D2550/2G-R11	Embedded system with NANO-CV-D25502, Intel® Atom™ D2550 dual-core 1.86 GHz CPU, with 2 x VGA, 3 x RS-232, 1 x RS-422/485, 2GB DDR3 SO-DIMM pre-installed, dual Realtek LAN, 9 V~28 V DC, RoHS

Packing List

1 x Power cord	1 x Screw set
1 x Power adapter (with PSE/ErP certified)	1 x Wall mount bracket