U-7550AM

OPC UA I/O Module
with 12-channels DI, 6-channels DO
and 2-port Ethernet Switch

Features

- Support OPC UA Server / Client and MQTT Client Protocol
- Support RESTful API via HTTP and HTTPS
- Support to Execute OPC UA, MQTT and RESTful API Simultaneously
- Support Logic Function Rule Setting: IF, THEN, ELSE
- Support Schedule: to Execute the Set Rules at a Specific Time.
- Support Event Log: Record the I/O Change for Device Tracking
- Support IoTstar Cloud Management Software.
- Built-in Web Server to Provide the Web User Interface
- I/O Channels: 12 x DI, 6 x DO
- Dual-port Ethernet Switch for Daisy-Chain Topology
- IEEE 802.3af-compliant Power over Ethernet (PoE)

Introduction

U-7550AM is a UA I/O module that provides 12 digital input, and 6 digital output channels. It has a built-in dual-port Ethernet switch to implement daisy-chain topology. The cabling is much easy and can reduce the total cable and switch cost. It follows IEEE 802.3af (Class 2) compliant Power over Ethernet (PoE) specification. It allows receiving power from PoE enabled network by Ethernet pairs. This feature provides greater flexibility and efficiency to simplify system design, save space, and reduce wirings and power sockets. It provides a Web UI to configure/control/monitor the modules, connections, and I/O status via a web browser. It is easy, fast, and no extra APP needed.

In industrial communication, UA I/O provides OPC UA Server / Client, MQTT Client and RESTful API protocols (can execute all communications at the same time.). Users can choose the networking mode according to their cases. And to transmit the values of the built-in I/O channels to the cloud system or field control system for displaying, analysis or strategy. Support Scaling. Let the analog signal be converted into a more readable value. Support logic function rule setting IF, THEN, ELSE, can set up logical condition/action for I/O and virtual point; Provide schedule function to execute the set rules at a specific time; and support RESTful API function, can read/write I/O and virtual point through HTTP or HTTPS.

Software Specifications

Protocol	
OPC UA Server / Client	• OPC Unified Architecture: 1.02 • Core Server Facet • Data Access Server Facet • Method Server Facet • UA-TCP UA-SC UA Binary • User Authentication: - Anonymous - Username/Password - X.509 Certificate • Security Policy: - None - Basic128Rsa15 (Sign, Sign & Encrypt) - Basic256 (Sign, Sign & Encrypt) - Basic256Sha256 (Sign, Sign and Encrypt) - Aes128Sha256RsaOaep (Sign, Sign & Encrypt) - Aes256Sha256RsaPss (Sign, Sign & Encrypt) • Can Execute with MQTT and RESTful API Communication Simultaneously • Max. Session Connections: 3 (Server only)
MQTT Client	• Connect to the MQTT Broker to read or control the I/O channel value by the publish/subscribe messaging mechanism. (MQTT Ver. 3.1.1; TLS Ver. 1.2)
RESTful API	• User can read/write the I/O & Virtual points through HTTP and HTTPS.

Function	
Web Interface for Configuration	• The system operation can be performed through the browser without installing software tools. • Use AES 256 encryption algorithm to encrypt web page setting data for general communication. • HTTPS upgrades the security of web communication.
Scaling	• Convert the analog signal to a more readable value. • Function is only available for modules with AI/O.
Security	• Infromation Security: Provide HTTPS, Port Binding , Allowlist, ICMP drop functions. • Data security: Provide Certificate (X.509), Communication Encryption (SSL/TLS) functions.
Rule Setting	• Provide simple logic condition rule setting, let UA I/O do automatic condition judgment and action control, to achieve simple intelligentization.
Schedule	• Provide schedule function to execute the set rules at a specific time.
Event Log	• When the I/O value changes, record the current I/O value for easy device tracking in the future.
IoTstar Setting	• Support IoTstar cloud management software developed by ICP DAS.

System Specifications

CPU Module	
CPU	32-bit CPU (400 MHz)
Watchdog Timer	Module, Communication(Programmable)
Isolation	
2-way Isolation	I/O: 2500 VDC
EMS Protection	
ESD (IEC 61000-4-2)	±4 kV Contact for each terminal ±8 kV Air for random point
EFT (IEC 61000-4-4)	±4 kV for Power Line
LED Indicators	
Status	Run, Ethernet, I/O
Ethernet	
Ports	2 x RJ-45, 10/100 Base-TX, Swtich Ports
PoE	Yes
LAN bypass	Yes
Security	ID, Password and IP Filter
Power	
Reverse Polarity Protection	Yes
Consumption	2.9 W
Powered from PoE	IEEE 802.3af, Class2
Powered from Terminal Block	+12 ~ +48 VDC
Mechanical	
Dimensions (mm)	97 x 120 x 47 (W x L x H)
Installation	DIN-Rail mounting
Environment	
Operating Temperature	-25 °C ~ +75 °C
Storage Temperature	-30 °C ~ +80 °C
Humidity	10 ~ 90% RH, Non-condensing

I/O Specifications

Digital Input/Counter	
Channels	12
Type	Dry Contact, Wet Contact
Sink/Source (NPN/PNP)	Dry: Source Wet: Sink
ON Voltage Level	Dry: Close to GND Wet: 1 VDC (max.)
OFF Voltage Level	Dry: Open Wet: +3.5 ~ +50 VDC (max.)
Max. Counts	4,294,967,295 (32-bit)
Frequency	100 Hz
Min. Pulse Width	5 ms
Input Impedance	10 kΩ
Overvoltage Protection	+60 VDC
Digital Output	
Channels	6
Type	Isolated Open Collector
Sink/Source (NPN/PNP)	Sink
Load Voltage	+5 ~ +50 VDC
Load Current	500 mA/channel
Overvoltage Protection	+60 VDC
Overload Protection	1.3 A
Short-circuit Protection	Yes
Power on Value	Programmable
Safe Value	Programmable

Wire Connections

Digital Input/ Counter	ON State Readback as 1	OFF State Readback as 0
Wet Contact (Sink)	1 VDC Max.	+3.5 VDC ~ +50 VDC Max.
	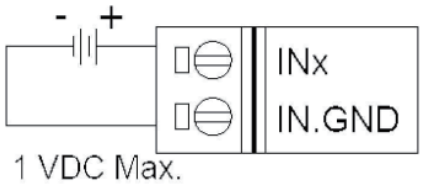	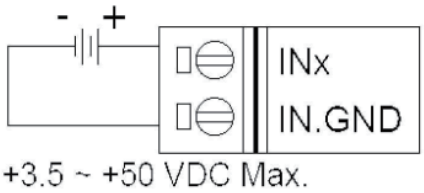
Dry Contact (Source)	Close to GND	Open
	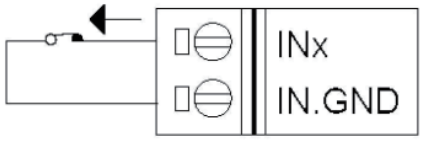	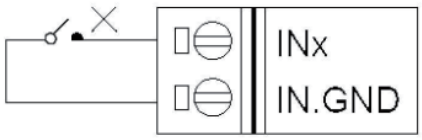
Digital Output	**ON State Readback as 1**	**OFF State Readback as 0**
Open Collector (Sink)	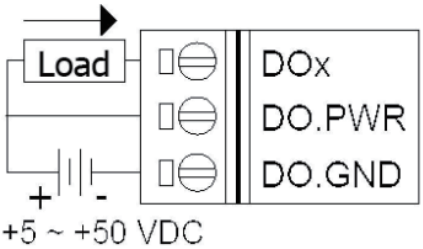	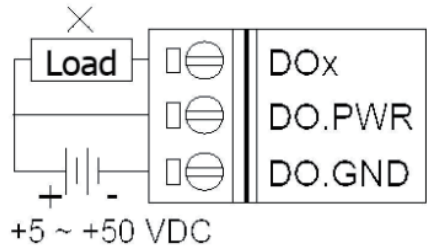

Pin Assignments

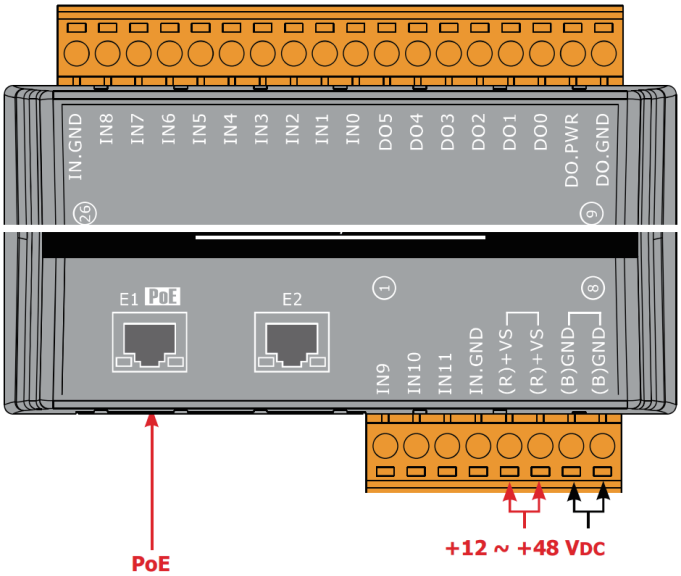

Appearance

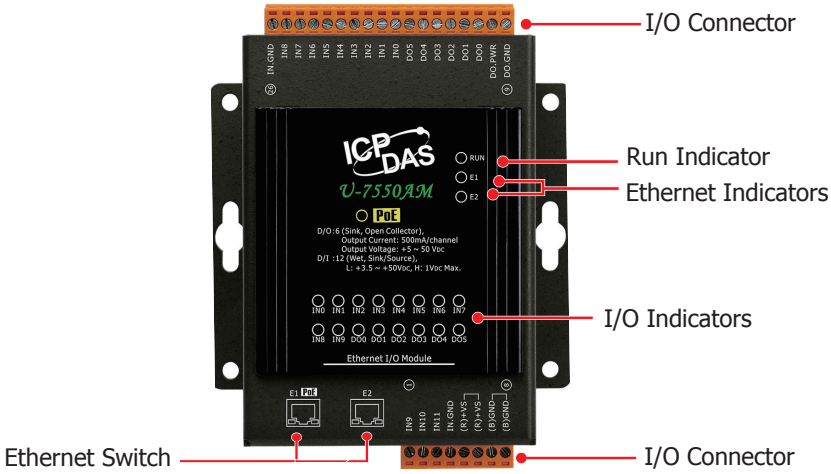

Dimensions (mm)

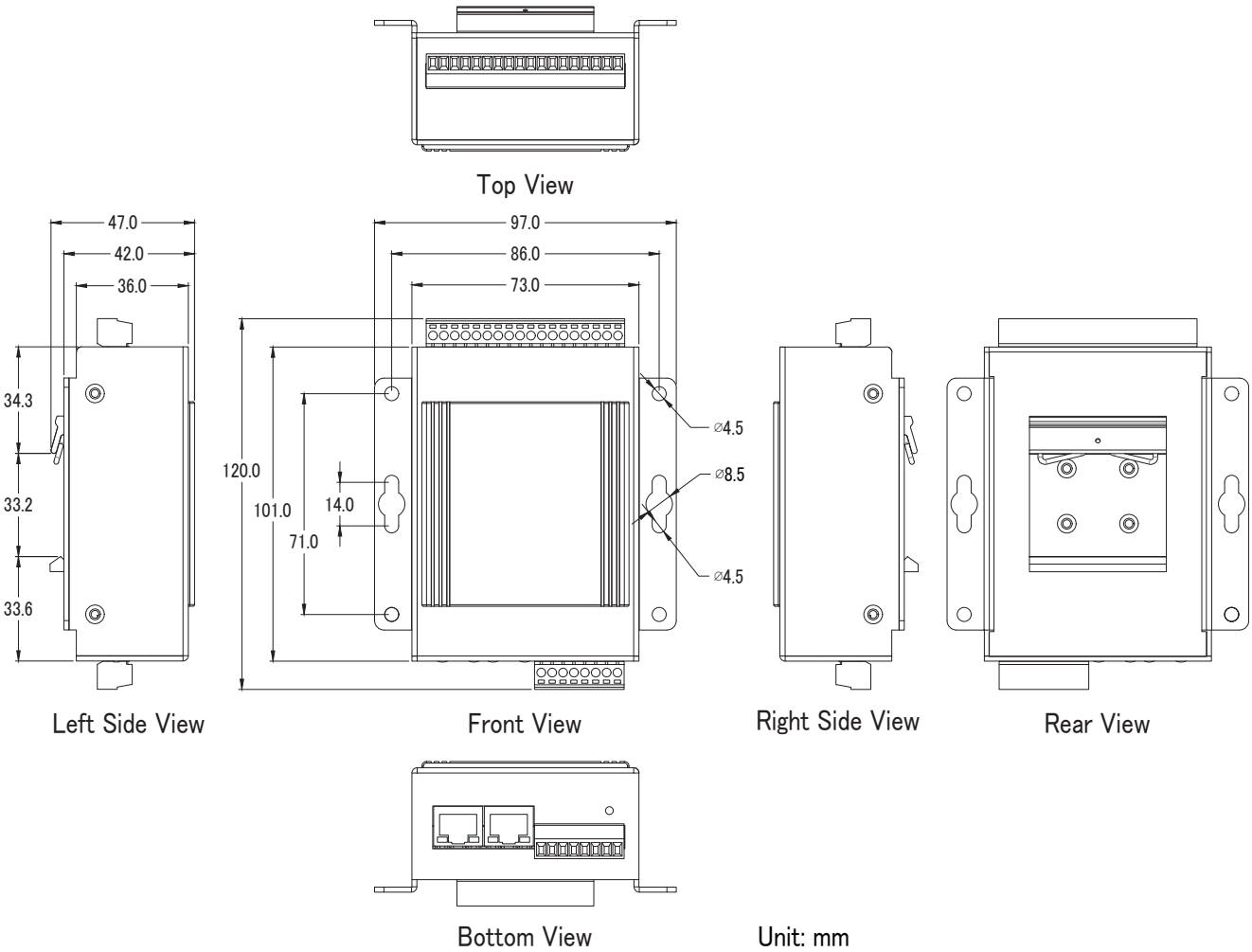

Ordering Information

U-7550AM CR	OPC UA I/O Module with 12-channels DI, 6-channels DO and 2-port Ethernet Switch. (RoHS)